Contents lists available at GrowingScience

International Journal of Data and Network Science

homepage: www.GrowingScience.com/ijds

The effect of e-WOM model mediation of marketing mix and destination image on tourist revisit intention

Muhammad Adam[a*], Mahdani Ibrahim[a], Teuku Roli Ilhamsyah Putra[a] and Mukhlis Yunus[a]

[a]*Faculty of Economics and Business, Universitas Syiah Kuala, Indonesia*

C H R O N I C L E

Article history:
Received: March 12, 2022
Received in revised format: September 26, 2022
Accepted: October 18, 2022
Available online: October 18 2022

Keywords:
Marketing mix
Destination image
e-WOM
Revisit intention

A B S T R A C T

Word-of-mouth (WOM) has been recognized as one of the most influential forms of information transmission. Advances in information technology and the emergence of online social networking sites have changed the manner in which data is delivered. This phenomenon has an impact on consumers because readily accessible information can significantly influence consumption-related decisions. The purpose of this paper is to examine the role of e-WOM in mediating the influence of the marketing mix and destination image on the intention of tourists to re-visit destinations. The primary data was derived from 190 tourist respondents and collected by means of questionnaires distributed via Google forms. The resulting data was analyzed using AMOS-SEM, while evaluating the role of e-WOM as a model involving a Sobel test. The results of the analysis indicated that e-WOM plays a highly significant role in piquing individual's' interest in re-visiting tourist sites. Contributory factors such as the marketing mix, destination image, and e-WOM all support this research hypothesis.

© 2023 by the authors; licensee Growing Science, Canada.

1. Introduction

Tourism activities have become a necessity in response to the rising demands of increasingly hectic human activities in present-day society (Adam, et al., 2022). Individuals become tourists for several reasons such as breaking their normal routine in the hope of experiencing a different atmosphere to that of normal life, as a fatigue reliever or just entertainment (Wu et al., 2018; Aksu et al., 2009). Tourism involves an individual travelling to or residing in a location outside his/her habitual environment during an unbroken period of no more than one year for pleasure, business, or other purposes. According to Law (2009), while tourism involves a range of leisure activities supported by various facilities and services provided by the community, entrepreneurs, central government, and local governments; its main component is an attraction which could, for instance, consist of the natural environment, namely flora and fauna, or famous works of art. In recent years, tourism has become a vital economic sector in many developing countries (Nguyen Viet et al., 2020) through the creation of relevant jobs, improvements in the local population's living standards and supported development of other industries (Brătucu et al., 2017; Villanueva-Álvaro et al., 2017). The Indonesian province of Aceh has long promoted itself as a tourist destination, especially through the activities of the Aceh Tourism Office which produces calendars of local, national, and international events. At the same time, Aceh participates in various tourism-related exhibitions staged in various countries in an attempt to promote the province as a holiday destination. One heavily promoted location in Acehis PulauWeh,also often called Sabang.
Interestingly, several researchers have observed that the difficulty which those seeking to promote the tourist trade on PulauWeh encounter in defining which attractions can be exploited more extensively in luring tourists to visit, stay, and

* Corresponding author.
E-mail address: mahdani@unsyiah.ac.id (M. Ibrahim)

ISSN 2561-8156 (Online) - ISSN 2561-8148 (Print)
© 2023 by the authors; licensee Growing Science, Canada.
doi: 10.5267/j.ijdns.2022.10.007

subsequently repeat the experience. Furthermore, the dramatic decline in tourism since the Covid-19 pandemic of 2020 has exacerbated the tourist trade's situation due to the lack of visitors. At the time of writing, PulauWeh remains largely devoid of domestic and foreign tourists. Key to attracting individuals back to a previously visited location is how satisfied they were during their initial visit. Consequently, this is a factor that needs to be addressed by those entities involved in tourism development in Aceh. A major research topic identified in the literature on tourism is that of return visit intention (Li et al., 2018). Numerous researchers agree that repeat visitors tend to stay longer at a specific destination, participate more intensively in consumptive activities, experience a greater degree of satisfaction, and disseminate positive WOM reports that their first-time counterparts. Commercial Enterprises involved in tourism, therefore, incur significantly lower marketing costs in attracting repeat visitors than new customers (Lehto et al., 2004; Zhang et al., 2018). In order to participate in tourism development in Aceh, especially on Pulau Weh, the authors would like to examine the factors that influence the enthusiasm of holiday makers to return to previously visited tourist sites. In this case, we emphasize the important factors of the marketing mix and the image projected of a specific tourist destination. On the other hand, we also highlight the Electronic-Word of Mouth (e-WoM) phenomenon as an important factor in combining the impact of the marketing mix and destination image ontourists' willingness to return.

The current study differs from research previously conducted on Aceh (Azman, Maulana, & Saleh, 2019; Herizal, Rassanjani, Muhkrijal, 2021; Nurlina, Pratama, Yolanna, & Andiny, 2022) and makes several contributions to the literature. The study provides a holistic review of the available literature on tourism by examining the role of the marketing mix, destination image, and e-WoM in influencing return visit intention. Since this framework also tests possibilities, we hope to further deepen our understanding, provide better insights, and contribute to the literatureon tourism. Finally, the findings of this study provide empirical support for our recommendations to those authorities responsible for tourism development. The paper is structured in five sections; the second section reviews the subject literature, the third describes the research methods employed, the fourth presents and discusses the results, and the last contains conclusions.

2. Literature Review and Hypothesis Development

2.1 Marketing mix, destination image, and electronic word-of-mouth (e-WOM)

The marketing mix has been defined as "… the mixture of controllable marketing variables that the firm uses to pursue the sought level of sales in the target market" (Kotler, 1984, p. 68). A key ingredient to designing a social marketing program is a complete marketing mix (4P) (Andreasen, 2002; French & Blair-Stevens, 2006) whose implementation is more effective than a simple promotional campaign(1P) (Lahtinen, Dietrich, & Rundle-Thiele, 2020). Integrated marketing communications (IMC) deploy social platforms and e-WOM as powerful tools for interacting with users, building new customers, and influencing consumer choices (Wolny & Mueller 2013). From certain of the views outlined above, e-WOM can be understood as the most powerful medium influencing consumer purchasing decisions, while the marketing mix constitutes an input for e-WOM as part of the transformation process involving interested consumers. Arndt (1967) defines WOM as a physical conversation regarding a product or service that occurs between individuals who are not commercial actors. Thus, the power of WOM influences the final buying stage because preferred verbal messages can intrigue customers, reduce fear and uncertainty, and provide reassurance (Martilla, 1971). The emergence of the internet has expanded the concept to an online context known as electronic word of mouth (e-WOM) which has the capacity to reach a large audience in a short period of time (Abubakar & Ilkan, 2013). e-WOM occurs when consumers use the internet to express positive or negative opinions about goods, services, and companies (Hennig-Thurau et al. 2004). Sharing online posts, images or videos, among other methods, is a form of e-WOM which has a significant impact on tourists' choice of holiday destination (Abubakar, 2016).

Destination image is considered an important factor influencing various conceptual frameworks that explain the tourist decision-making process. According to Iordanova (2017), tourists make purchasing decisions based on the mental images they have of a particular location. Since the ground-breaking research conducted by Gunn (1972), the concept of destination image has attracted widespread attention in the tourism marketing literature. Researchers have defined destination imagery in various ways but, generally, as a sophisticated construct (Akgün et al., 2019). The definition of destination image focuses on an individual's overall perception of a specific location (Chiu et al., 2016) composed of a set of impressions, ideas, expectations, and emotional thoughts (Assaker & Hallak, 2013; Iordanova, 2017; Tasci & Gartner, 2007). It also includes associations and information connected to the individual's goal (Iordanova, 2017; Stylos et al., 2017). The company's sustainability efforts encourage consumers to spread positive e-WOM on platforms that provide useful, interesting, and well-designed information (Choi et al., 2019; Haudi et al., 2022). This study expands our understanding of corporate sustainability initiatives by applying dominant service logic to the explanation of consumer evaluation and e-WOM. Therefore, the authors propose the following H_1 and H_2:

H_1: *Marketing mix has a positive effect on e-WOM.*

H_2: *Destination image has a positive effect on e-WOM.*

2.2 Marketing mix, destination image, and revisit intention

Re-visit intention indicates a tendency or plan to return to a previously visited location (Cole & Scott, 2004). Service providers remain aware of customers' intention to re-visit certain locations because the cost of attracting new ones is higher than retaining current ones (Um et al., 2006). A comprehensive marketing mix implementation policy has the potential to persuade customers to make repeat purchases (Mannan et al., 2019; Lahtinen et al., 2020). Researchers have previously proven that the determinants of re-visit intention comprise satisfaction, service behavior, perceived value and the comparative attractiveness of alternatives (Petrick et al., 2001; Um et al., 2006). Ryu et al. (2007) stated that the positive image of each provider increases the customer's desire to utilize its services again. In addition, re-visit intention is influenced by an evaluation of prior experiences, new attractions and the promotional tools employed (Aziz et al., 2012). Loyalty involves repeat purchases, a positive attitude, long-term commitment, a desire to continue affiliation, and the intention to disseminate positive information among others (Artuger et al., 2013). Previous research strongly suggested that the intended destination's image influences visitor loyalty (Huwae, 2020). For example, a case study conducted on the city of Chengdu found that a major factor encouraging tourists to return was the influence of its image (Liang & Xue, 2021). Destination image is closely related to "destination attribute expectations" which, in turn, influences visitor intentions. Moreover, their attitudes to earlier travel experiences influence tourists' future intentions to visit destinations (Chen, 2002). Therefore, the authors propose H_3 and H_4 as follows:

H_3: *Marketing mix has a positive effect on tourists' re-visit intention.*
H_4: *Destination image has a positive effect on tourists' re-visit intention.*

2.3 e-WOM and re-visit intention

Technological advances, particularly those in the field of information technology have given rise to smartphones that facilitate consumers' use of social networking platforms such as Facebook, LinkedIn, and Airbnb to instantly utilize information and forge strong relationships with brands (Correa et al. 2010). Virtual community membership exerts a strong influence on tourist behavior and the manner in which information is disseminated. Furthermore, e-WOM has been used within the world of marketing to promote the distribution of various producer-owned facilities to consumers. Adopting trust transfer as a theoretical framework, this study examines an empirical model of the effect of e-WOM on tourists' revisit intentions. Previous studies have indicated that e-WOM provides positive support to re-purchasing activities (Wandoko & Pangganti, 2022), while also significantly influencing the intention to resume travel (Abubakar, 2016; Wijayaa et al., 2021). The results of research within the context of medical tourism found that e-WOM positively influences tourists' intention to travel (Farrukh et al, 2022). Several findings of these studies and the more general views on e-WOM described above further strengthen our efforts to balance perceptions of the results of this research. Therefore, the authors propose H_5 as follows:

H_5: *e-WOM has a positive effect on tourists' intention to re-visit*.

2.4 E-WOM as a mediator

The current study uses e-WOM as a mediating variable of the influential relationship between the marketing mix and destination image on revisit intentions. The concept of researchers employing mediating variables refers to the principles of mediation which are psychologically important and moderation (Baron & Kenny, 1986). In psychology, the mediator variable is occasionally referred to as the intervening variable. In statistics, the intervening variable is usually considered a sub-type of the mediating variable. However, the distinction between the two terms is somewhat blurred with the result that they are often used interchangeably. The mediating variable can be applied with several provisos. First, the independent variable is significant in predicting the dependent variable. Second, when the mediating variable exerts strong control the condition of the independent predictor of the dependent variable is weakened and may even no longer be significant (Baron & Kenny, 1986; Juwaini et al., 2022).

Full mediation can be said to have occurred when the entire relationship between the independent and dependent variables is dependent upon the mediator variable. If the focus is primarily on the mediator, the relationship will founder. Being the site of numerous interactions, full mediation is less common than partial mediation which occurs when the mediating variable is only partly responsible for the relationship between the independent and dependent variables. If the mediating variable is omitted a relationship between the independent and dependent variables will persist, although it will not be as strong. The analysis of e-WOM as a mediator remains extremely limited. Nevertheless, certain findings are almost the same in context, such as those of Fachrurazi et al., (2022) who found e-WOM to be a mediator of the relationship between brand influence and re-purchase where it contributes to the influence relationship. Moreover, positive e-WOM intentions and brand commitment act as mediators in the satisfaction-intention relationship (Jain, Dixit, & Shukla, 2022). Confident that the current research results will add to the repertoire of the mediating role of e-WOM, the authors propose H_6 and H_7 as follows:

H_6: *e-WOM plays a role in the influence between the marketing mix and tourists' intention to re-visit.*
H_7: *e-WOM plays a role in the influence between the image of the destination and tourists' intention to re-visit.*

2.5 Research model

Based on the literature review above and several hypotheses that have been developed, the authors summarize these in the research model contained in Fig. 1.

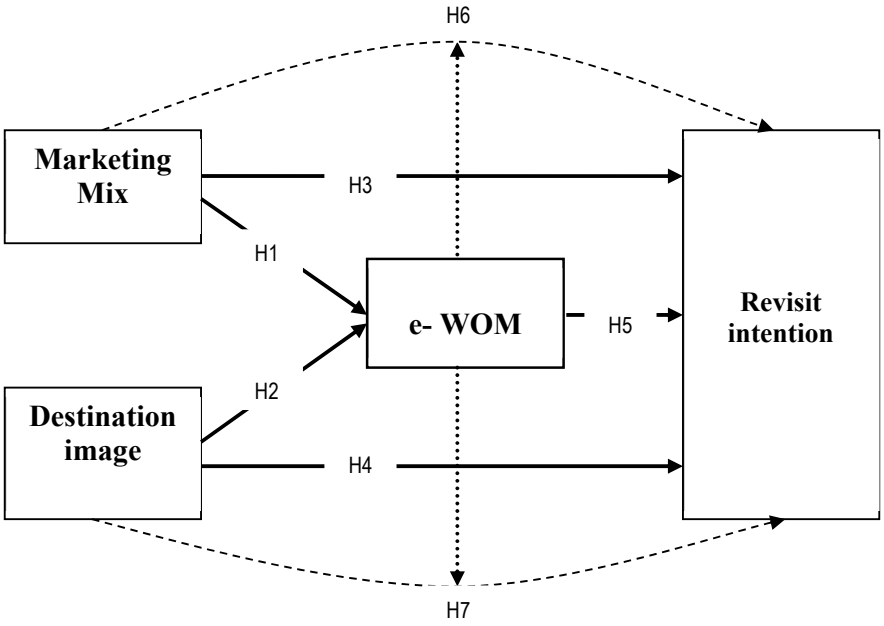

Fig. 1. Research model

3. Methodology and result

3.1 Data collection technique

This study draws on two data sources, namely; secondary and primary. Secondary data is obtained from public and private institutions authorized to manage tourism, as well as from reading materials, particularly journals, that focus on this economic sector. We obtained primary data by distributing questionnaires through travel services and various forms of accommodation to visitors to Pulau Weh. 500 questionnaires were distributed over the course of even days of and 345 were returned before the 3-week deadline. From a total sample of 345 respondent returns only 190 (55.07%) could be used as primary data. Of these 190 respondents, 55.26% were male and 44.74% female. With regard to marital status, 86.84%were married and 13.16%single. Respondents were divided into four categories: 18-29 (11.58%), 30-39 (20.52%), 40-49 (60.53%), and over 50s (7.37%). The respondents' highest education level was that of an undergraduate degree. The descriptive statistics are shown in Fig. 2.

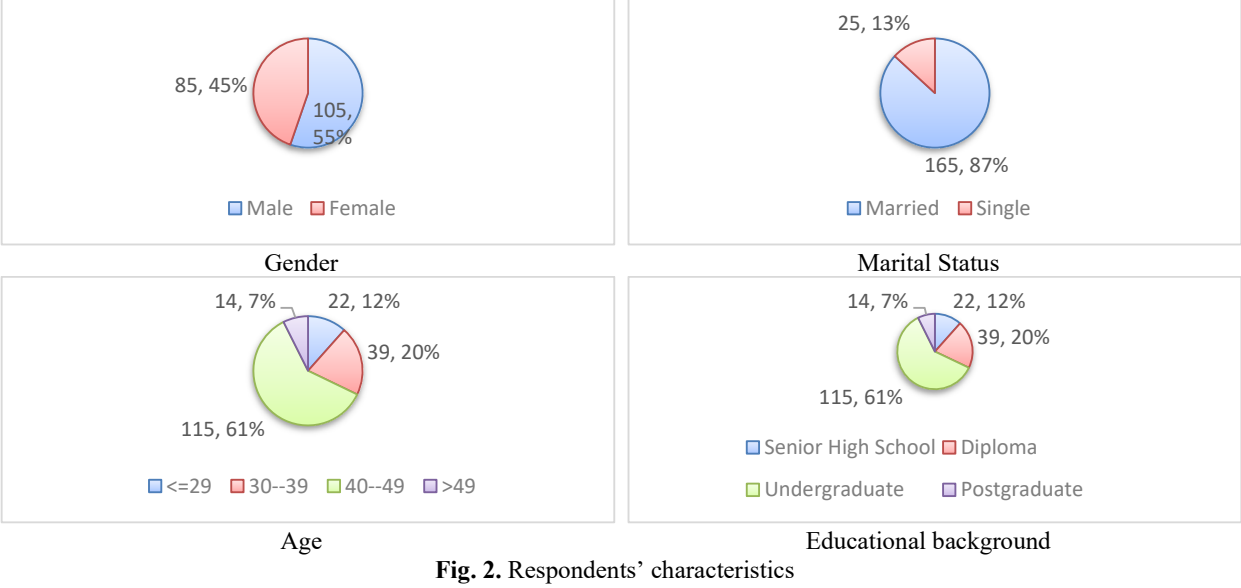

Fig. 2. Respondents' characteristics

3.2 Indicator measurement

The measurement of observed variables used indicators employed by previous researchers. The re-visit variables adopted from previous investigations consisted of 4 of 6 indicators (Petrick, 2004) and adjusted to the conditions and segmentation of tourist attractions, (e.g.: "In the future, I will speak positively about the location I visited to others"; "In future, I will recommend this tourist spot to my friends and relatives"). The e-WOM variable consists of five indicators adapted from previous research and six indicators focused on medical tourism (Bambauer-Sach & Mangold, 2011), (e.g.: "To make sure I choose the right travel destination, I often read tourists' online travel reviews", "I often gather information from tourists' online reviews before I travel to a particular destination"). The marketing mix is interrelated within the context of product, price, place, and promotion (4Ps). The context has been broken down into four indicators based on perspective (Lahtinen, Dietrich, & Rundle-Thiele, 2020; Lim, 2021), with this variable being measured by four indicators (e.g.: "The costs we incur according to what we enjoy"; "The place which we visited satisfied our requirements"). The five indicators used to measure the image of a specific destination were adopted from those proposed by Beerli and Martin (2004), but subsequently expanded to six items (e.g.: "We are fascinated by the natural panorama in this location"; "The infrastructure makes it easy for us to vacation in this location"). The results of the analysis suggested that several indicators were not valid because the achievement of the factor load did not meet the required standards (Hair et al., 2010). The indicators not included in the analysis were RI4., EW5., DI2,3, and 4., and MX4. Descriptive statistics are provided in Table 2.

3.3 Analysis technique

Data analysis was performed using SPSS and the AMOS software package version 22.0. A two-step SEM procedure, using the maximum likelihood estimate in AMOS was performed (Arbuckle & Wothke 1999), as was a confirmatory factor analysis (CFA) to create a measurement model, followed by a structural model to test our hypotheses. Additional tests of convergent validity, discriminant validity, and common method variance were completed to assess the measurement model. CFA was estimated for each construction. The confirmatory factor analysis (CFA) was used to examine convergence, discriminant validity, and composite reliability (CR) (Anderson & Gerbing, 1988). Moreover, the SEM was used to examine correlation. The results of the analysis confirmed that several indicators were not valid, due to the achievement of the factor load failing to meet the required standards (Hair et al., 2010). The indicators that were not included in the analysis comprised RI4., EW5., MX 4., DI 2,3, and 4. Descriptive statistics are provided in Table 1.

Table 1
Reliability, Convergent and Discriminant Validity Result Summary

Construct and item	Factor loading	Composite Reliability	AVE	Shared Variance	Cronbach Alpha
Revisit Intention					
RI1	0.728				
RI2	0.738	0.837	0.563	0.288	0.844
RI3	0.788				
E-Wom					
EW1	0.769	0.872	0.632	0.299	0.841
EW2	0.89				
EW3	0.759				
EW4	0.753				
Marketing mix					
MX1	0.783				
MX2	0.85	0.892	0.677	0.154	0.858
MX3	0.701				
MX4	0.939				
Destination image					
DI1	0.832				
DI5	0.776	0.867	0.619	0.559	0.851
DI6	0.789				

Fig. 3 shows the results of CFA with an appropriate model. The study eliminated several indicators whose factor loadings were below 0.50 to ensure the suitability of the model. Several eliminated indicators included: re-visit intention was eliminated by 1 indicator, E-WOM by 1 indicator, marketing mix by 1 indicator, and destination image by 3 indicators. Based on the results of the analysis, the Chi-square, RMSA, GFI, AGFI, CMIN/DF, TLI, and CFI values were found to be in accordance with the fit criteria as shown in Table 2.

Table 2
Model Measurement Feasibility Test Results

Goodness of Fit Index	Cut off Value	Result	Model Evaluation	Goodness of Fit Index	Cut off Value	Result	Model Evaluation
Chi-Square	< 287.882	101.347	Good	CMIN/DF	≤ 2.00	1.877	Good
RMSEA	≤ 0.08	0.068	Good	TLI	≥ 0.90	0.961	Good
GFI	≥ 0.90	0.932	Good	CFI	≥ 0.90	0.973	Good
AGFI	≥ 0.90	0.885	Good				

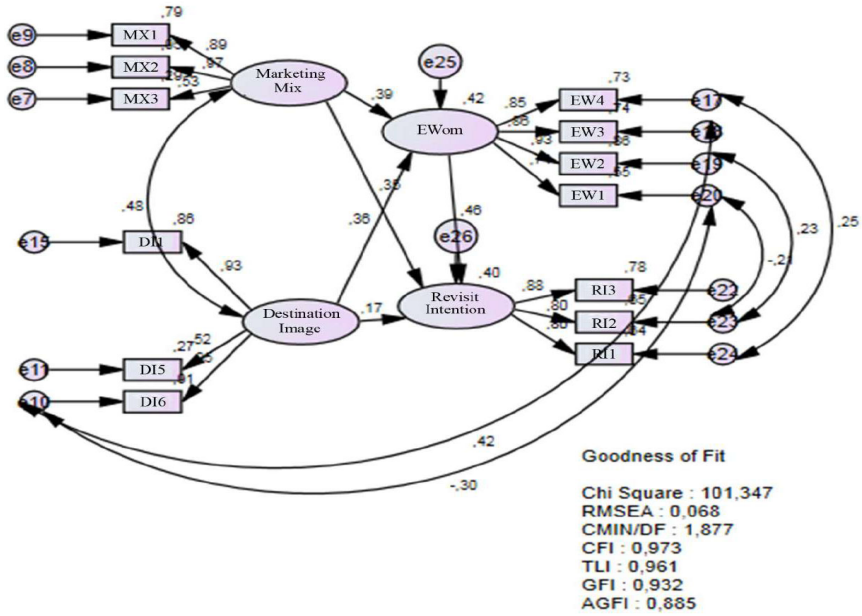

Fig. 3. CFA results fitting the model

Table 2 contains the results of the model feasibility test. The indirect consequence was tested using a bootstrapping method on a sample size of 5,000 produced at a 95% confidence interval (Arbuckle, 2011). Chi-square, RMSA, GFI, AGFI, CMIN/DF, TLI, and CFI, were measured to check the model fit (Hair et al., 2010). All these values fell within the recommended ranges (Hair et al., 2010). Table 3 CFA results direct influence of marketing mix on e-WOM and intention to revisit, namely 0.389 (38.9%) and 0.355 (35.5%) and significant at the level < 0.01. Furthermore, the direct effect of destination image on e-WOM and intention to re-visit is 0.360 (36.0%) and 0.174 (17.4%), significant at a level of<0.01. Furthermore, the analysis also found that the direct effect of e-WOM on the intention to re-visit was 0.459 (45.9%), significant at a level of<0.001.

Table 4
Standardized Regression Weight Structural Equational Model

		Effect	Estimate	S.E.	C.R.	P
e-Wom	←	Marketing Mix	0.389	0,103	4.552	0.000
e-Wom	←	Destination Image	0.360	0.065	4.938	0.000
Re-visit Intention	←	Marketing Mix	0.355	0.101	3.807	0.033
Re-visit Intention	←	Destination Image	0.174	0.065	2.131	0.000
Re-visit Intention	←	E-WOM	0.459	0.082	5.025	0.000

Source: Primary Data, 2022 (Processed)

3.4 Path analysis technique

Path analysis in this study was undertaken using the Sobel test technique because hypothesis testing involving mediating variables can be carried out with this form of analysis developed in 1982 (Ghozali, 2014). Table 5 contains results of testing the e-WOM hypothesis as a mediating variable of the influence between the marketing mix and the intention to re-visit. The Sobel test results confirmed an e-WOM mediation effect of 3,130 on the standard deviation with a significance level of < 0.01. Furthermore, it was found that the mediating role of e-WOM on the relationship between destination image and revisit intention was 3.94 standard deviations, the significance level was at < 0.001.(see Table 6).

Table 5
Sobel test results for marketing mix, E-WOM and re-visit intention

	Input:		Test statistics	Std. Error	ρ-value
a	0.389	Sobel test	3.13074106	0.05703155	0.00174366
b	0.459	Aroian test	3.09696444	0.05765355	0.00195513
s_a	0.103	Goodman test	3.16564749	0.05640268	0.00154738
s_b	0.082				

Table 6
Sobel test results for destination image, E-wom and re-visit intention

	Input:		Test statistics	Std. Error	ρ-value
a	0.362	Sobel test	3.94801897	0.04308642	0.0000788
b	0.459	Aroian test	3.91673416	0.04242259	0.00008976
s_a	0.065	Goodman test	3.98006561	0.04174755	0.0000689
s_b	0.082				

Based on the analysis results contained in Tables 4, 5, and 6, the direct and indirect effects based on the hypothesis statement (H1 - H7) are overall reflected in Figures 3 and 4. The magnitude of the direct influence of the marketing mix on e-WOM and intention to re-visit the e-WOM as a mediator is shown in Fig. 3. Fig. 4 shows the direct influence of destination image on e-WOM and intention to re-visit where e-WOM is the mediator.

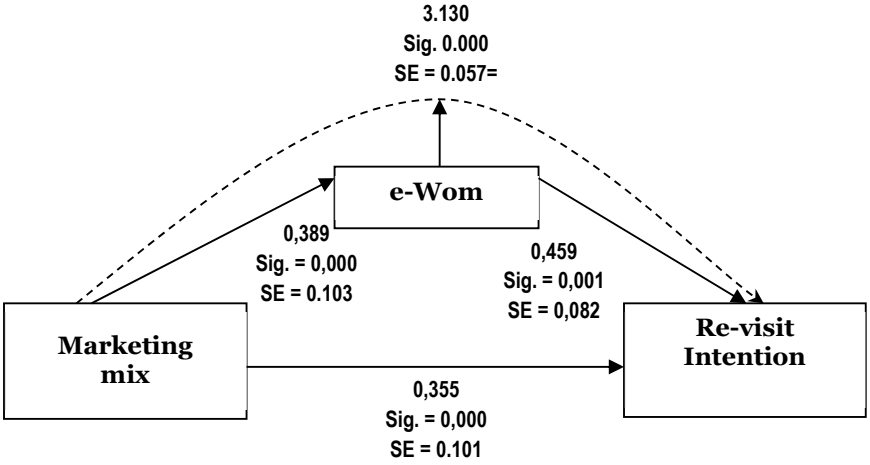

Fig. 3. The results of the analysis of the path of direct influence and indirect influence (marketing mix, e-WOM, and revisit intention)

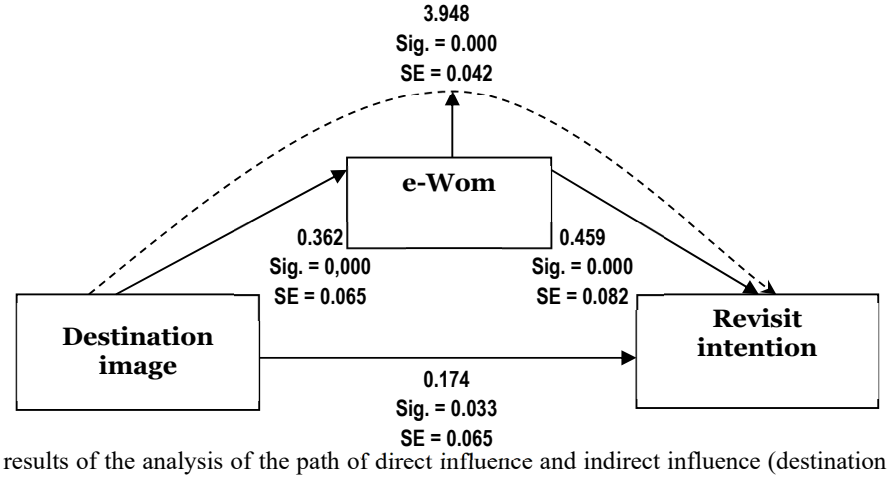

Fig. 4. The results of the analysis of the path of direct influence and indirect influence (destination image, e-WOM, and re-visit intention)

4. Discussion and implications for practice

This study examines the phenomena of local and international tourism on Pulau Weh in the province of Aceh. Research on the tourism sector is highly significant because it constitutes a service-based industry with considerable strategic potential within national and regional economic development. Development of tourism is very important since not only will it have a positive knock-on effect on other economic sectors, but will also create jobs, increase income, and encourage local government to build and maintain infrastructure. This, in turn, will improve the quality of life for village communities (Elistia, 2020). Because of the importance of expanding the tourism sector, researchers highlight the intention to re-visit previously visited destinations. Researchers have identified several factors potentially influencing intention to re-visit tourism, including e-WOM activities, marketing mix, and destination image. The primary data collected in the course of this study, which was subsequently analyzed using an appropriate methodology, strongly suggests that the marketing mix, destination image and e-

WOM contributed positively and significantly to tourists' intention of returning to previously-visited destinations. The results of this study support those of earlier research that intention to re-visit tourism, in addition to being satisfied with the destination, is also influenced by e-WOM (Heydari, Maryam; Ali; Ansari, 2021). Therefore, these researchers consider e-WOM activities designed to increase tourist visits, in particular the intention to return to the same attraction, need to be taken into account by the tourism authorities on Pulau Weh.

Lahtinen et al. (2020) argued that the implementation of the marketing mix was more effective than promotion alone (1P). The results of this study support this statement because it investigates the effect of the marketing mix on e-WOM and re-visit intention in context (4P). The marketing mix was seen to have a positive and significant effect on e-WOM and re-visit intention. These results also support those of earlier research (Wahab et al., 2016). Therefore, the application of the marketing mix to increasing e-WOM activities and the intention to re-visit is important for decision-making authorities on Pulau Weh.

This study supports the opinion of tourism experts who consider the image of a destination to be very important because the impression that tourists have in their minds with regard to a specific destination will affect their future perceptions and behavior in the future and influence their choice of destination (Castro, Armario, & Ruiz, 2007). Destination image was found to have a significant effect on e-WOM and the intention to re-visit. In seeking to increase the number of tourist visits to Pulau Weh this image should not be ignored in the provision of infrastructure, especially those related to attractions on the island.

5. Conclusion

This study highlights the problems confronting the tourism industry in Pulau Weh, Sabang, Aceh Province. The research has proposed seven hypotheses to be investigated based on primary data obtained from visitors to tourist areas on the island. From the results of the analysis of the research data, the marketing mix was found to have a positive and significant influence on e-WOM and re-visit intentions (H_1 and H_3). Consequently, the results of this study can be said to support those of previous research (Wahab et al., 2016). The subsequent finding is that the image of the destination has a positive and significant effect on e-WOM and intention to re-visit (H_2 and H_4). These results support those of previously conducted research (Heydari et al., 2021; Huwae et al., 2020). Furthermore, these researchers found that e-WOM contributed positively to the intention to re-visit (H_5), a conclusion which supports those of earlier investigations (Wandoko & Panggati, 2022; Jalilvand & Samiei, 2012). Moreover, the findings of our analysis, as with those of previous investigations (Jalilvand & Samiei, 2012) found that e-WOM played a role in partially mediating the effect of the marketing mix and destination image on re-visit intentions (H_6 and H_7).

References

Abubakar, A. Mohammed; Ilkan, Mustafa (2013). More Adverts or More eWOM?s. *Journal of Business & Financial Affairs,* 2(2). doi:10.4172/2167-0234.1000e129

Abubakar, M. A. (2016). Does eWOM influence destination trust and travel intention: a medical tourism perspective. *Economic Research-Ekonomska Istraživanja,* 29(1), 598–611. doi:10.1080/1331677x.2016.1189841

Adam, M., Ibrahim, M., Idris, S., Saputra, J., & Putra, T. (2022). An investigation of e-marketing and its effect on the consumer buying decision during COVID-19 pandemic in Aceh Province, Indonesia: A mediating role of perceived risk. *International Journal of Data and Network Science*, *6*(1), 115-126.

Akgün, A. E., Senturk, H. A., Keskin, H., & Onal, I. (2020). The relationships among nostalgic emotion, destination images and tourist behaviors: An empirical study of Istanbul. *Journal of Destination Marketing & Management*, *16*, 100355.

Aksu, A. A., Caber, M., & Albayrak, T. (2009). Measurement of the destination evaluation supporting factors and their effects on behavioral intention of visitors: Antalya region of Turkey. *Tourism Analysis*, *14*(1), 115-125.

Anderson, J. C., & Gerbing, D. W. (1988). Structural equation modeling in practice: A review and recommended two-step approach. *Psychological Bulletin, 103*(3), 411–423. doi:10.1037/0033-2909.103.3.411

Andreasen, A.R. (2002). Marketing social marketing in the social change marketplace. *Journal of Public Policy and Marketing*, *21*(1), 3-13. doi: 10.1509/jppm.21.1.3.17602.

Arbuckle, J.L., & Wothke, W. (1999). *Amos 4.0 user's guide*. 1995–2005. Chicago, IL: SmallWaters Corporation.

Arndt, J. (1967). Role of product-related conversations in the diffusion of a new product. *Journal of marketing Research*, *4*(3), 291-295.

Artuger, S., Cetinsoz, B. C., & Kilic, I. (2013). The effect of destination image on destinationloyalty: An application in Alanya. *European Journal of Business and Management*, *5*(13), 124–136.

Assaker, G., & Hallak, R. (2013). Moderating effects of tourists' novelty-seeking tendencies on destination image, visitor satisfaction, and short- and long-term revisit intentions. *Journal of Travel Research*, *52*(5), 600–613.

Aziz, N.A., Ariffin, A.A.M., Osmar, N.A. and Evin, C. (2012). Examining the impact of visitors' emotions and perceived quality towards satisfaction and revisit intention to theme parks. *Jurnal Pengurusan*, *35*, 97-109.

Azman, Z., Maulana, M. A., & Saleh, R. (2019). Strategi Humas Dinas Pariwisata Kota Banda Aceh dalam Membangun Banda Aceh sebagai Kota Pariwisata (Studi pada Dinas Pariwisata Banda Aceh). *Jurnal Peurawi: Media Kajian Komunikasi Islam*, *2*(2), 46-55.

Bambauer-Sachse, S., & Mangold, S. (2011). Brand equity dilution through negative online word-ofmouth communication. *Journal of Retailing and Consumer Services, 18*(1) 38–45. doi:10.1016/j.jretconser.2010.09.003

Baron, R M., & Kenny, D A. (1986). The Moderator – Mediator Variable Distinction in Social Psychological Research: Conceptual, Strategic, and Statistical Considerations. *Journal of Personality and Social Psychology*, *51*(6), 1173 – 1182.

Beerli, A., & Martin, J. D. (2004). Factors influencing destination image. *Annals of tourism research*, *31*(3), 657-681.

Brătucu, G., Băltescu, C., Neacșu, N., Boșcor, D., Țierean, O., & Madar, A. (2017). Approaching the sustainable development practices in mountain tourism in the Romanian Carpathians. *Sustainability*, *9*(11), 2051. doi:10.3390/su9112051

Castro, C. B., Armario, E. M., & Ruiz, D. M. (2007). The influence of market heterogeneity on the relationship between a destination's image and tourists' future behaviour. *Tourism Management*, *28*(1), 175–187.

Chen, S.H. (2002). The developmental mechanism and policy recommendation of Lukang, Changhua as a local tourist town. Unpublished Master's thesis, *Department of Geography, Changhua Normal University*, Changhua, Taiwan.

Chiu, W., Zeng, S., & Cheng, P. S.-T. (2016). The influence of destination image and tourist satisfaction on tourist loyalty: A case study of Chinese tourists in Korea. *International Journal of Culture, Tourism and Hospitality Research*, *10*(2), 223–234.

Choi, C. S., Cho, Y. N., Ko, E., Kim, S. J., Kim, K. H., & Sarkees, M. E. (2019). Corporate sustainability efforts and e-WOM intentions in social platforms. *International Journal of Advertising*, *38*(8), 1224-1239.

Cole, S.T., & Scott, D. (2004). Examining the mediating role of experience quality in a model of tourism experiences. *Journal of Travel and Tourism Marketing*, *16*(1), 79-90. doi:10.1300/J073v16n01_08

Correa, T., A.W. Hinsley, & H.G. de Z_u~niga. (2010). Who interacts on the web? The intersection of user's personality and social media use. *Computers in Human Behavior, 26*(2), 247–53. doi: 10.33059/jseb.v13i1.3195

Elistia. (2020). Perkembangan dan Dampak Pariwisata di Indonesia Masa Pandemi Covid-19. Prosiding Konferensi Nasional Ekonomi Manajemen dan Akuntansi (KNEMA). *Media online.* https://jurnal.umj.ac.id/index.php/KNEMA/.(Online)

Fachrurazi, F., Silalahi, S. A. F., Hariyadi, H., & Fahham, A. M. (2022). Building halal industry in Indonesia: the role of electronic word of mouth to strengthen the halal brand image. *Journal of Islamic Marketing*, (ahead-of-print). *Journal of Islamic Marketing*, doi:10.1108/JIMA-09-2021-0289

Farrukh, M., Shahad., I. A., Sajid, M., Sheikh, M. Y., & Alam, I. (2022). Revisiting the intention to travel framework in the perspective of medical tourism: The role of eWord-of-mouth and destination image. *International Journal of Healthcare Management*, *15*(1), 28-35. doi: 10.1080/20479700.2020.1836733

French, J. & Blair-Stevens, C. (2006). Social Marketing National Benchmark Criteria. *National Social Marketing Centre:* UK.

Ghozali, I. (2014). *Aplikasi Analisis Multivariate dengan Program IBM SPSS 21*. Semarang: Badan Penerbit – Universitas Diponegoro

Gunn, C. (1972). Vacationscape: Designing tourist regions*. Austin: Bureau of business research*. University of Texas.

Hair, J.F., W.C. Black, B.J. Babin, and R.E. Anderson. (2010). Multivariate data analysis: A global perspective. (Vol. 7). Upper Saddle River, NJ: Pearson.

Haudi, H., Rahadjeng, E., Santamoko, R., Putra, R., Purwoko, D., Nurjannah, D., ... & Purwanto, A. (2022). The role of e-marketing and e-CRM on e-loyalty of Indonesian companies during Covid pandemic and digital era. *Uncertain Supply Chain Management*, *10*(1), 217-224.

Hennig-Thurau, T., K.P. Gwinner, G. Walsh, and D.D. Gremler. (2004). Electronic word-of-mouth via consumer-opinion platforms: What motivates consumers to articulate themselves on the internet? *Journal of Interactive Marketing* 18(1), 38–52.

Herizal, H., Rassanjani, S., & Muhkrijal, M. (2021). Kebijakan Kepariwisataan di Provinsi Aceh: Peluang dan Tantangan*. Jurnal Public Policy, 7*(1), 21-28.

Heydari Fard, M., Sanayei, A., & Ansari, A. (2021). Determinants of medical tourists' revisit and recommend intention. *International Journal of Hospitality & Tourism Administration*, *22*(4), 429-454.

Huwae, V. E., Noermijati, N., Rofiaty, R., & Husein, A. S. (2020). The mediating role of destination value, tourist satisfaction, and tourist engagement on the relationship between destination image and tourist loyalty in Maluku, Indonesia. *Leisure/Loisir*, *44*(4), 587-620.

Iordanova, E. (2017). Tourism destination image as an antecedent of destination loyalty: The case of Linz, Austria. *European Journal of Tourism Research*, *16*, 214–232. doi:10.54055/ejtr.v16i.286

Jain, M., Dixit, S., & Shukla, A. (2022). Role of e-service quality, brand commitment and e-WOM trust on e-WOM intentions of millennials. *The International Review of Retail, Distribution and Consumer Research*, 1-21. doi: 10.1080/09593969.2022.2070860

Jalilvand, M. R., & Samiei, N. (2012). The effect of electronic word of mouth on brand image and purchase intention: An empirical study in the automobile industry in Iran. *Marketing Intelligence & Planning, 30*(4), 460 476. doi:10.1108/02634501211231946

Juwaini, A., Chidir, G., Novitasari, D., Iskandar, J., Hutagalung, D., Pramono, T., ... & Purwanto, A. (2022). The role of customer e-trust, customer e-service quality and customer e-satisfaction on customer e-loyalty. *International Journal of Data and Network Science*, *6*(2), 477-486.

Kotler, P. (1984). *Marketing Management: Analysis, Planning, and Control*. Prentice-Hall.

Lahtinen, V., Dietrich, T., & Rundle-Thiele, S. (2020). Long live the marketing mix. Testing the effectiveness of the commercial marketing mix in a social marketing context. *Journal of Social Marketing*, *10*(3),357-375.

Law on Tourism (2009). *Law of The Republic of Indonesia Number 10*. Year 2009 Concerning Tourism.

Lehto, X. Y., O'Leary, J. T., & Morrison, A. M. (2004). The effects of prior experience on vacation behavior. *Annals of Tourism Research*, *31*(4), 801–818.

Liang, X., & Xue, J. (2021). Mediating effect of destination image on the relationship between risk perception of smog and revisit intention: a case of Chengdu. *Asia Pacific Journal of Tourism Research*, *26*(9), 1024-1037.

Lim, W. M. (2021). A marketing mix typology for integrated care: the 10 Ps. *Journal of Strategic Marketing*, *29*(5), 453-469. doi:10.1080/0965254x.2020.1775683

Mannan, M., Chowdhury, N., Sarker, P., & Amir, R. (2019). Modeling customer satisfaction and revisit intention in Bangladeshi dining restaurants. *Journal of Modelling in Management*, *14*(4), 922-947.

Martilla, J. A. (1971). Word-of-mouth communication in the industrial adoption process. *Journal of Marketing Research, 8*(2), 173–178. doi:10.1177/002224377100800

Nguyen Viet, B., Dang, H. P., & Nguyen, H. H. (2020). Revisit intention and satisfaction: The role of destination image, perceived risk, and cultural contact. *Cogent Business & Management*, *7*(1), 1796249.

Nurlina, N., Pratama, Y. S., & Andiny, P. (2022). Strategi Pengembangan Industri Pariwisata (Studi Kasus Objek Wisata Pulau Rukui Kabupaten Aceh Tamiang). *Jurnal Samudra Ekonomi Dan Bisnis*, *13*(1), 1-14.

Petrick, J.F., Morais, D.D., & Norman, W.C. (2001). An examination of the determinants of entertainment vacationers' intentions to revisit. *Journal of Travel Research, 40*(1), 41-48. doi:10.1177/004728750104000106

Ryu, K., Han, H., & Kim, T. (2008). The relationships among overall quick-casual restaurant image, perceived value, customer satisfaction, and behavioral intentions. *International Journal of Hospitality Management,* 27(3), 459-469.

Stylos, N., Bellou, V., Andronikidis, A., & Vassiliadis, C. A. (2017). Linking the dots among destination images, place attachment, and revisit intentions: A study among British and Russian tourists. *Tourism Management*, *60*, 15–29.

Tasci, A. D., & Gartner, W. C. (2007). Destination image and its functional relationships. *Journal of Travel Research*, *45*(4), 413–425. doi: 10.1177% 2F0047287507299569

Um, S., Chon, K. and Ro, Y. (2006). Antecedents of revisit intention. *Annals of Tourism Research, 33*(4), 1141-1158. doi:10.1016/j.annals.2006.06.003

Villanueva-Alvaro, J. J., Mondejar-Jimenez, J., & Saez- Martinez, F. J. (2017). Rural tourism: Development, management and sustainability in rural establishments. *Sustainability*, *9*(5), 818. doi :10.3390/su9050818

Wahab, Norsyaheera Abd; Hassan, Lailatul Faizah Abu; Shahid, Siti Asiah Md; Maon, Siti Noorsuriani. (2016). The Relationship Between Marketing Mix And Customer Loyalty In Hijab Industry: The Mediating Effect Of Customer Satisfaction. *Procedia Economics and Finance, 37*, 366–371. doi:10.1016/S2212-5671(16)30138-1

Wandoko, W. & Panggati, I.E. (2022). The Influence of Digital Influencer, e-WOM and Information Quality on Customer Repurchase Intention toward Online Shop in e-Marketplace during Pandemic COVID-19: The Mediation Effect of Customer Trust. *Journal of Relationship Marketing, 21*(2), 148-167. doi:10.1080/15332667.2022.2035198

Wijayaa, O., Sulistiyanib, S., Pudjowatic, J., Kurniasih, N., & Purwanto, A. (2021). The role of social media marketing, entertainment, customization, trendiness, interaction and word-of-mouth on purchase intention: An empirical study from Indonesian smartphone consumers. *International Journal of Data and Network Science*, *5*(3), 231-238.

Wolny, J., & Mueller, C. (2013). Analysis of fashion consumers' motives to engage in electronic word-of-mouth communication through social media platforms. *Journal of Marketing Management, 29*(5), 562–83. doi:10.1080/0267257X.2013.778324

Wu, T. P., Wu, H. C., Liu, S. B., & Hsueh, S. J. (2018). The relationship between international tourism activities and economic growth: Evidence from China's economy. *Tourism Planning & Development*, *15*(4), 365-381.

Zhang, H., Wu, Y., & Buhalis, D. (2018). A model of perceived image, memorable tourism experiences and revisit intention. *Journal of Destination Marketing & Management, 8*, 326–336. doi:10.1016/j.jdmm.2017.06.004

© 2023 by the authors; licensee Growing Science, Canada. This is an open access article distributed under the terms and conditions of the Creative Commons Attribution (CC-BY). license (http://creativecommons.org/licenses/by/4.0/).